JW Copper Products
A JW Metal Products Company

22” x 17” x 9” Copper Sink

Available models:

CPSK22X17X09 - 48 oz (16G, .064”) copper

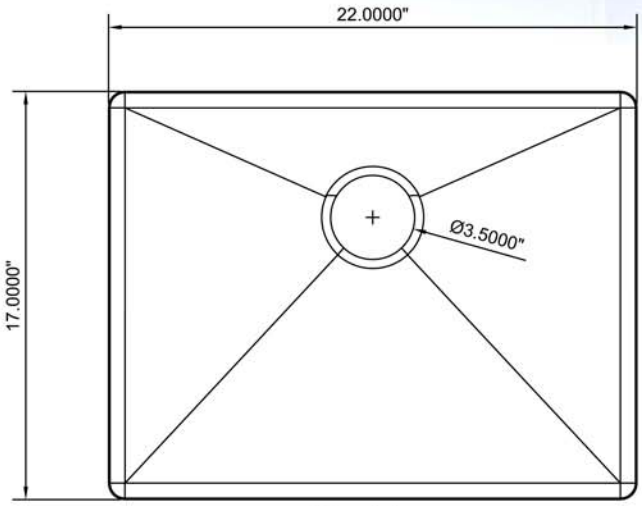

Top View

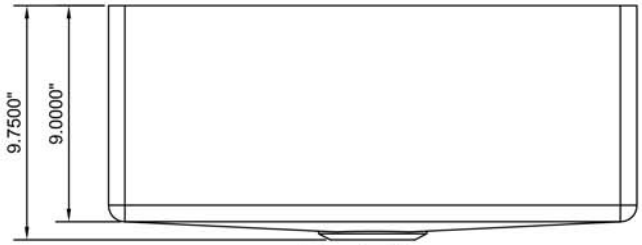

Front View

Features:
- Brushed finish
- 5/8" radius corners
- Functional drain grooves
- Center, rear drain placement
- 3 1/2" drain opening

Bowl Size: 22" wide x 17" long*

Bowl Depth: 9"

Minimum cabinet size: 24"

*Length is left to right, width is front to back.

Available options:
- Integrated drain board (12", 18" or 24")
  (includes poly cutting board)

JW Copper Products
A JW Metal Products Company

505 Cuthbertson St.
Monroe, NC 28105

Toll Free - (877) 484 - 0088
Local - (704) 635 - 2064
Fax - (704) 220 - 0208
www.jwcopperproducts.com